UFC 30 - UFC 60

LINES FOR ELASTIC FOLDERS AND SMALL CASES WITH SNAP FASTENERS

Electro-pneumatic unit to fasten 2 rounded metal tags onto elastic bands, cords and ribbons up to 40 mm width.

Technical features

Used Materials:

– round/flat elastic band

– cord and ribbons

– metal tags PE 22-N2 or PE 27-N2

Elastic diameter (30-unit):
1 mm up to 3 mm

Flat elastic width (30-unit): 5 mm

Cord diameter (60-unit):
3 mm up to 7 mm

Textile ribbons min 15 mm to max 40 mm (depending on the materials consistency)

Capacity: up to 35 cycles/minute (depending on the length of the final product)

Electrical power req.: 1 Kw

Compressed air:
400 NL/min. (pressure 7 bar)

Overall dimensions:
L=1900mm W=900mm H=1900mm

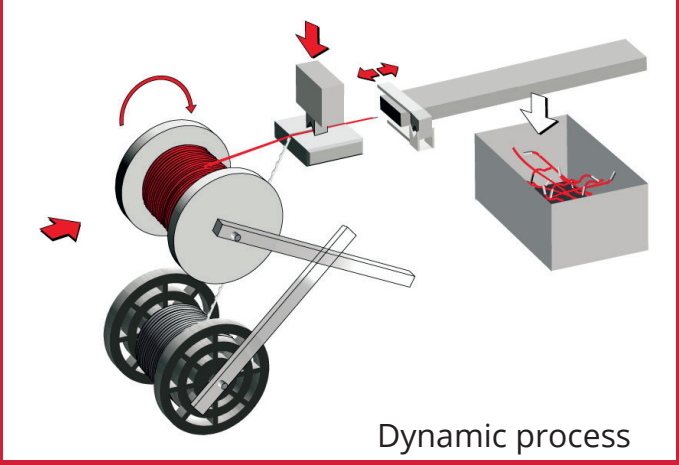

Dynamic process

For more info:
www.peroniruggero.com